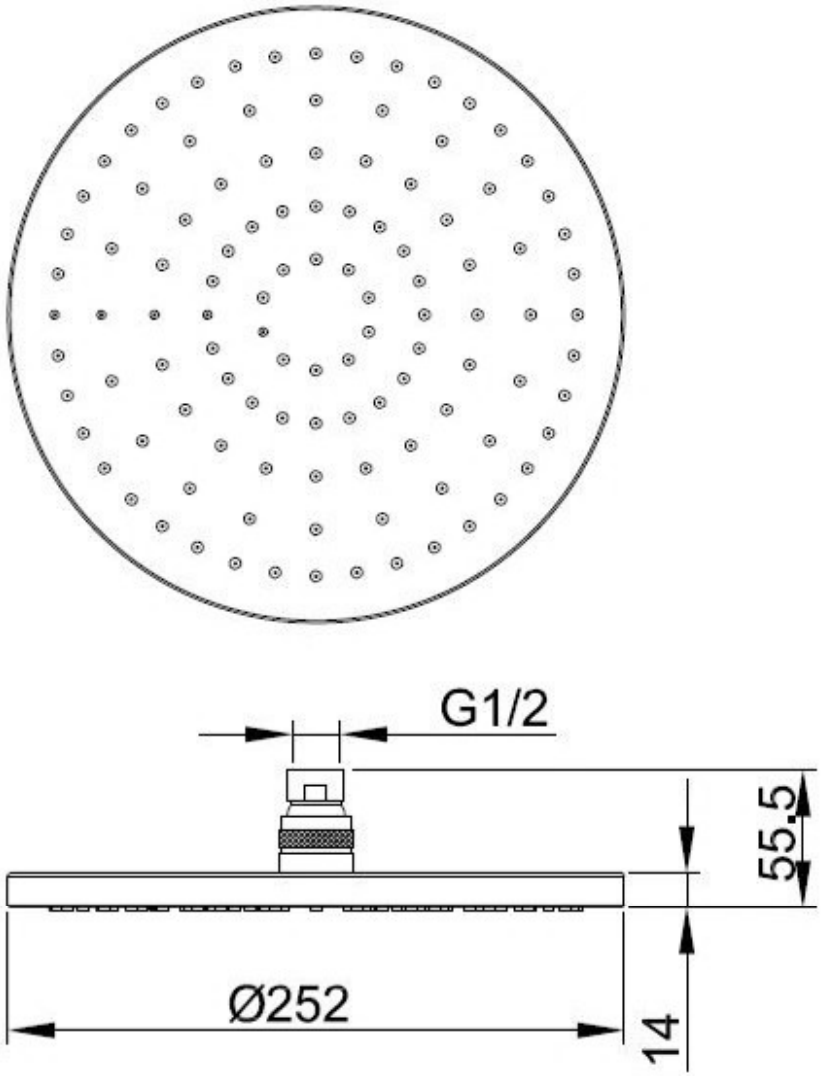
G1/2
55.5
Ø252
14